DC9 GIFTS PTE LTD
DC9.COM.SG
+65 6274 8452

Digital Artwork Proposal

for INV-2x-3xxx

Artwork Template *for* **Essential Shoe Bag SBTB-05**

Expected Delivery / Collection Date: **xx/xx/202x**

Pantone Codes

PRODUCT IN ACTUAL SIZE

BAG COLOUR IN BLACK

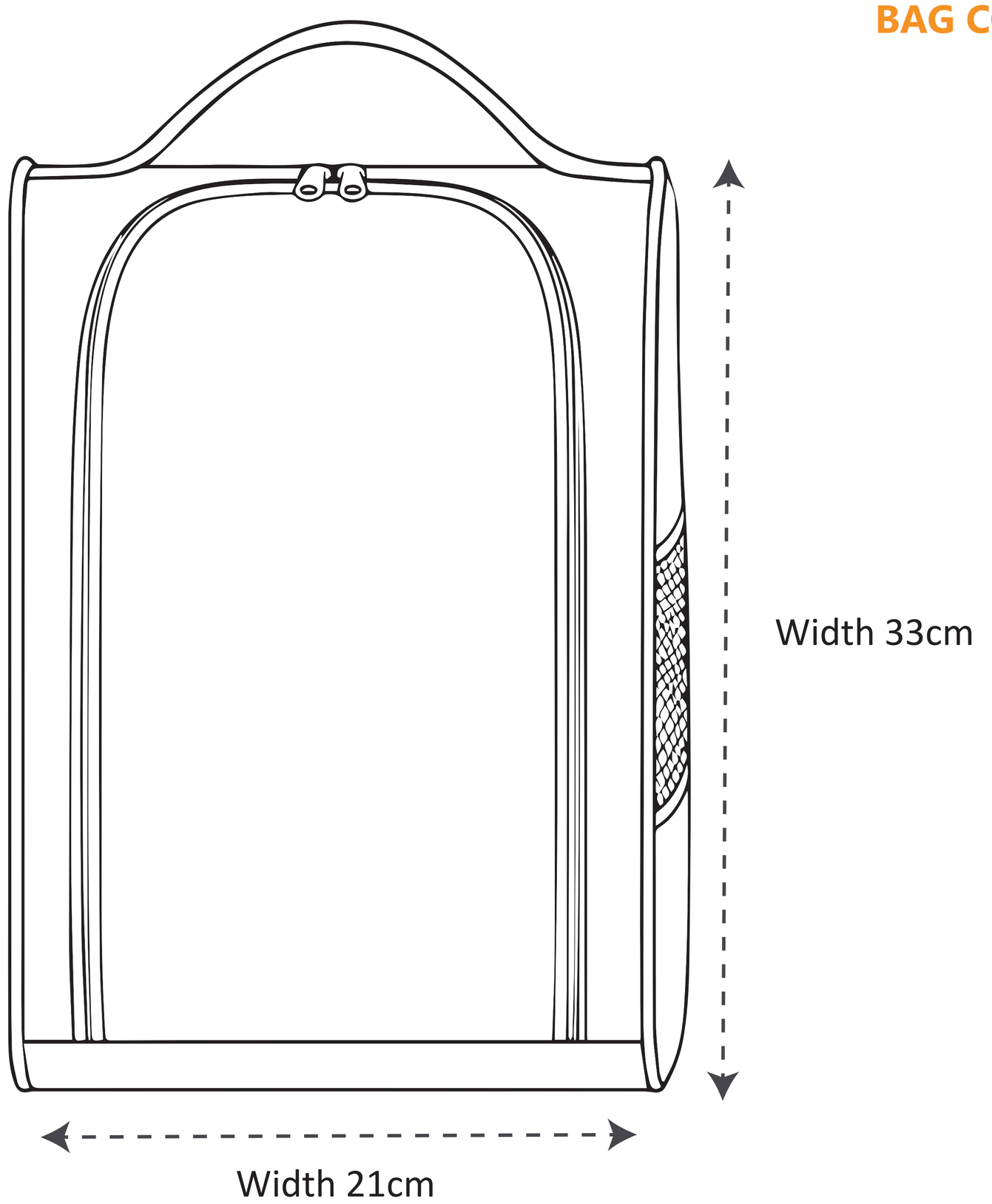

Product Details

note: sizes may vary +/- 5% from actual product
Do take note that Mock up shown are for illustration purposes only.

Model / Sizes	Quantity	Model / Sizes	Quantity
Sample			